HarvaLED™

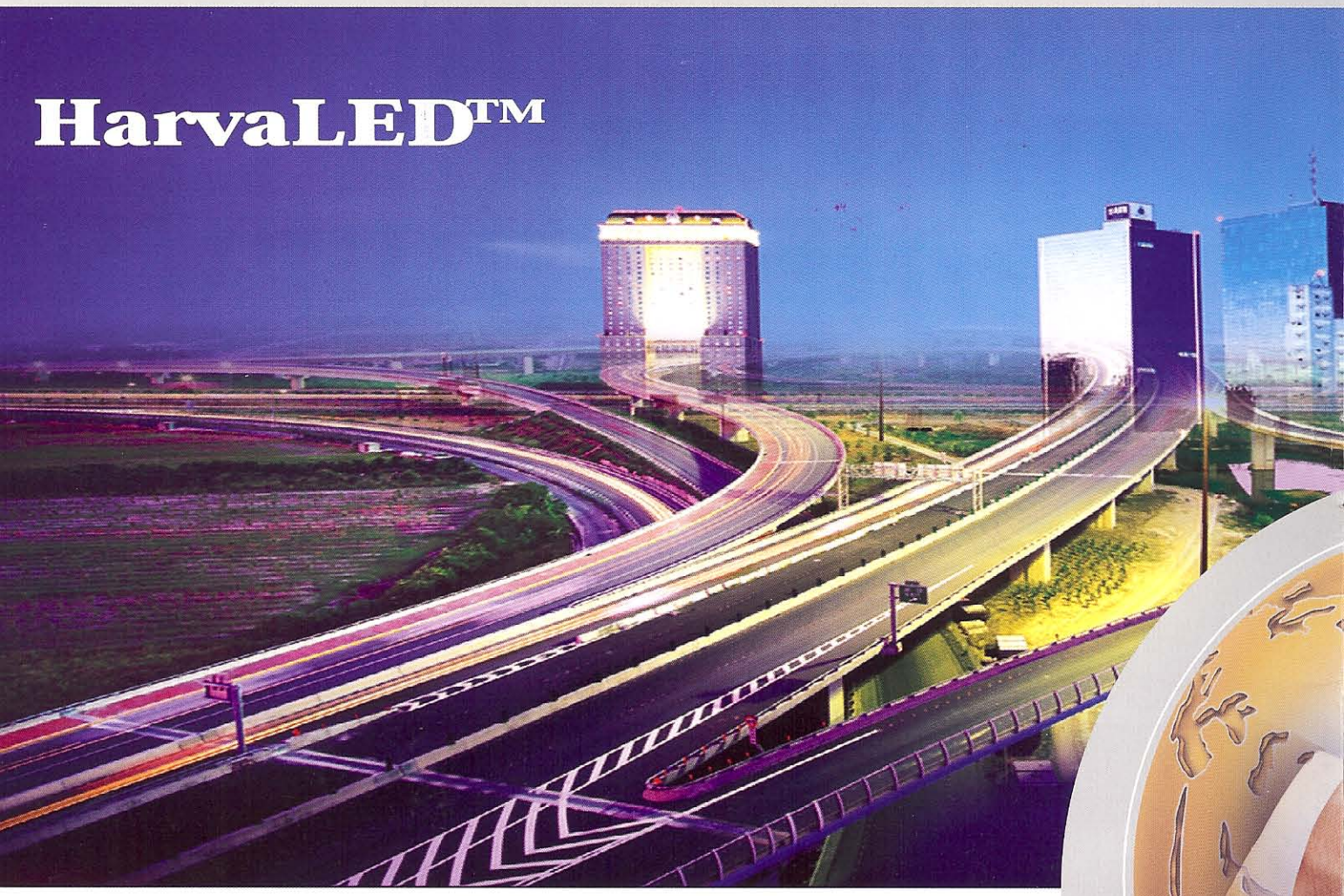

Company Profile

- Established :March 1995
- Employees:300
- Capital : US$ 38 Million
- Major Shareholders :
  - UMC Group
  - Sunplus Technology
  - Youngtek Corp.
- Manufacturing Base :
  - Hsin Chu, Taiwan

Important Events

03/1995 Established
02/1996 Mass production
07/1996 First SMD Chip LED package patent (Taiwan) granted
07/1996 Mass production started
04/1997 Capital-in from UMC group & Sunplus Corp.
01/1998 First SMD LD package patent (US) granted
11/1998 OEM business awarded
11/1998 New plant inaugurated
05/1995 Delivery of OEM projects began
08/1999 ISO 9002 certified
11/1999 First High efficient SMD chip LED package patent granted
05/2000 Capacity reached 100KK/M
01/2002 QS 9000 certified
03/2002 Publicly traded on OTC market
10/2003 ISO 14001 certified
02/2004 Capacity reached 300KK/M
11/2004 White LED license granted from Osram

Contents

	Page
Company Profile	2
Description of part No.	4
HT-PX66 Series	5
HT-PX68 Series	6
HT-PX76 Series	7
HT-PX78 Series	8
HT-MBP Series	9
HT-Lenses Series	9
Light Bars	10
Ring Modules	17
HT-MR16	19
LED Spot Lights	21

Description of Part Number

HT-P166BPU

Company	Product Series	Dice	Package	Emission Color	Current Code
HT: For Harvatek	P: Power Package	1: Single	Outline dimension	BP: White	J:100mA
		2: Dual		USD:Red	H:150mA
		3.Triple		UY :Amber	T:300mA
		4.Quadruple		NG:Green	U:350mA
				NB:Blue	S:600mA
					V:700mA
					Y:900mA
					W:1050mA

HT-MBP176BPU

Company	Product Type	Product Series	Dice	Package	Emission Color	Current Code
HT: For Harvatek	MB: Metal Board	P: Power Package	1: Single	Outline dimension	BP: White	J:100mA
			2: Dual		USD:Red	H:150mA
			3.Triple		UY:Amber	T:300mA
			4.Quadruple		NG:Green	U:350mA
					NB:Blue	S:600mA
						V:700mA
						Y:900mA
						W:1050mA

HT-MR16BPU-A1

Company	Product Series	Diameter	Emission Color	Current Code	Cup Type	Base Type
HT: For Harvatek	MR:Multifaceted Reflector	16 : Φ50mm	BP: White	U:350mA	A	1
			USD:Red	V:700mA	B	2
			UY:Amber		C	3
			NG:Green			
			NB:Blue			
			VP:Pink			

HT-LB1131UY

Company	Product Series	Length	Width	Series	Parallel	Emission Color
HT: For Harvatek	LB:Light Bar	1. 100mm	1. 20mm			BP: White
		2. 200mm	2. 35mm			USD:Red
		3. 290mm	3. 15mm			UY:Amber
		4. 140mm	4. 40mm			NG:Green
						NB:Blue

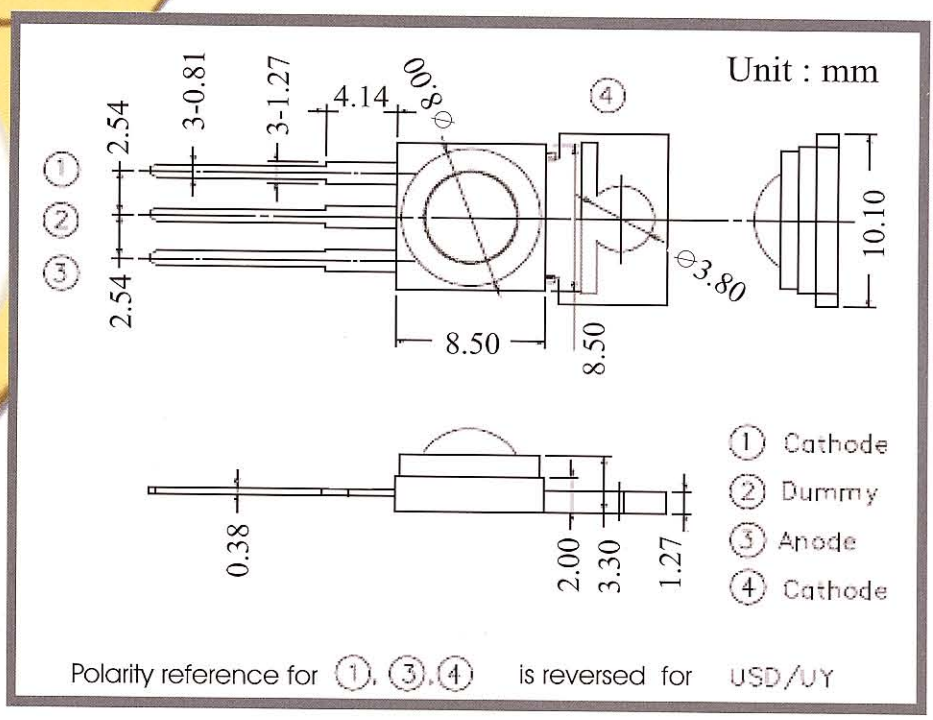

Part Number	Emission Color	LED Material	I_F(mA)	V_F(V)		λ(nm)			Flux (lm)		View Angle 2θ ½
				Typ.	Max.	λd	λp	Δλ	Min.	Typ.	
HT-P166USDJ	Red	AlInGaP	100	2.20	2.79	625	636	30	2.9	5	±35
HT-P166UYJ	Amber	AlInGaP	100	2.20	2.79	595	600	30	2.9	5	
HT-P166NGH	Green	InGaN	150	3.40	3.99	527	522	50	2.9	2.5	
HT-P166NBH	Blue	InGaN	150	3.40	3.99	470	465	50	2.0	3	
HT-P166USDT	Red	AlInGaP	300	2.20	2.79	625	636	30	13.9	18	
HT-P166UYT	Amber	AlInGaP	300	2.20	2.79	595	600	30	13.9	18	
HT-P166NGU	Green	InGaN	350	3.40	3.99	527	522	50	18.1	25	
HT-P166NBU	Blue	InGaN	350	3.40	3.99	470	465	50	2.9	8	
HT-P266USDS	Red	AlInGaP	600	2.20	2.79	625	636	30	18.1	35	
HT-P266UYS	Amber	AlInGaP	600	2.20	2.79	595	600	30	18.1	30	
HT-P266NGV	Green	InGaN	700	3.40	3.99	527	522	50	30.6	50	
HT-P266NBV	Blue	InGaN	700	3.40	3.99	470	465	50	4.9	12	
HT-P366USDY	Red	AlInGaP	900	2.20	2.79	625	636	30	23.5	50	
HT-P366UYY	Amber	AlInGaP	900	2.20	2.79	595	600	30	23.5	45	
HT-P366NGW	Green	InGaN	1050	3.40	3.99	527	522	50	39.8	70	
HT-P366NBW	Blue	InGaN	1050	3.40	3.99	470	465	50	4.9	17	
HT-D466NGV	Green	InGaN	700	6.40	7.11	527	522	50	67.2	100	
HT-D466NBV	Blue	InGaN	700	6.40	7.11	470	465	50	13.9	25	

Part Number	Emission Color	LED Material	I_F(mA)	V_F(V)		CCT			Flux (lm)		View Angle 2θ ½
				Typ.	Max.	Min.	Typ.	Max.	Min.	Typ.	
HT-P166BPH	White	InGaN	150	3.40	3.99	3000	-	9000	10.7	20	±35
HT-P166BPU	White	InGaN	350	3.40	3.99	3000	-	9000	18.1	30	
HT-P266BPV	White	InGaN	700	3.40	3.99	3000	-	9000	40.0	70	
HT-P366BPW	White	InGaN	1050	3.40	3.99	3000	-	9000	67.2	100	
HT-D466BPV	White	InGaN	700	6.40	7.11	3000	-	9000	113.6	150	

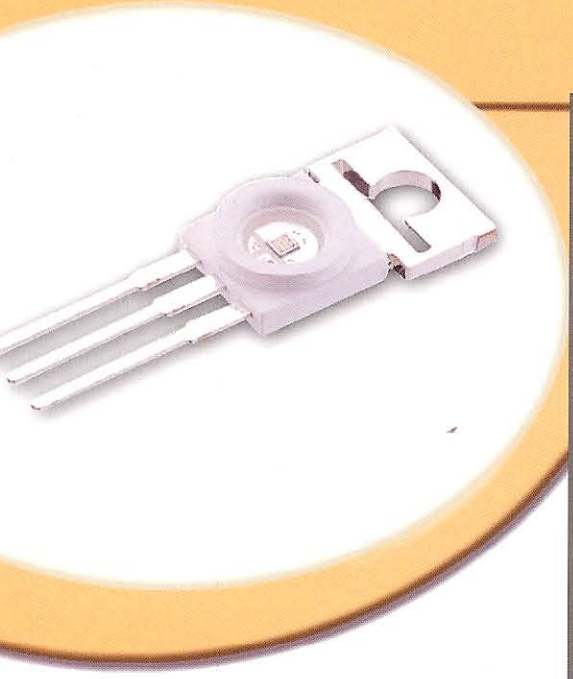

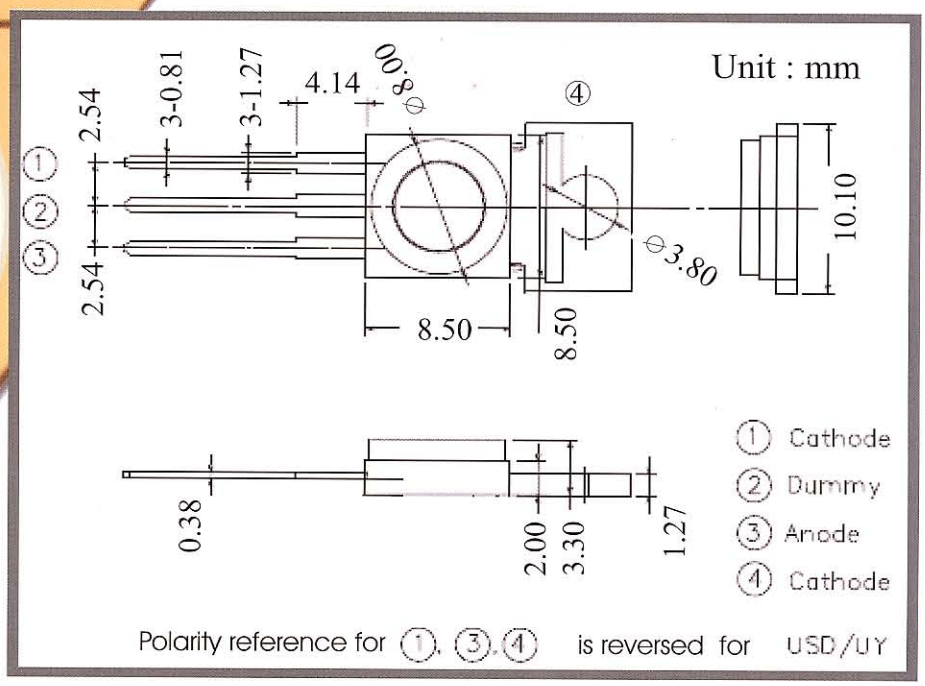

Part Number	Emission Color	LED Material	I_F (mA)	V_F (V)		λ (nm)			Flux (lm)		View Angle 2θ ½
				Typ.	Max.	λd	λp	Δλ	Min.	Typ.	
HT-P168USDJ	Red	AlInGaP	100	2.20	2.79	625	636	30	2.9	5	±55
HT-P168UYJ	Amber	AlInGaP	100	2.20	2.79	595	600	30	2.9	5	
HT-P168NGH	Green	InGaN	150	3.40	3.99	527	522	50	2.9	5	
HT-P168NBH	Blue	InGaN	150	3.40	3.99	470	465	50	2.0	2.5	
HT-P168USDT	Red	AlInGaP	300	2.20	2.79	625	636	30	13.9	18	
HT-P168UYT	Amber	AlInGaP	300	2.20	2.79	595	600	30	13.9	18	
HT-P168NGU	Green	InGaN	350	3.40	3.99	527	522	50	18.1	25	
HT-P168NBU	Blue	InGaN	350	3.40	3.99	470	465	50	2.9	8	
HT-P268USDS	Red	AlInGaP	600	2.20	2.79	625	636	30	18.1	35	
HT-P268UYS	Amber	AlInGaP	600	2.20	2.79	595	600	30	18.1	30	
HT-P268NGV	Green	InGaN	700	3.40	3.99	527	522	50	30.6	50	
HT-P268NBV	Blue	InGaN	700	3.40	3.99	470	465	50	4.9	12	
HT-P368USDY	Red	AlInGaP	900	2.20	2.79	625	636	30	23.5	50	
HT-P368UYY	Amber	AlInGaP	900	2.20	2.79	595	600	30	23.5	45	
HT-P368NGW	Green	InGaN	1050	3.40	3.99	527	522	50	39.8	70	
HT-P368NBW	Blue	InGaN	1050	3.40	3.99	470	465	50	4.9	17	
HT-D468NGV	Green	InGaN	700	6.40	7.11	527	522	50	67.2	100	
HT-D468NBV	Blue	InGaN	700	6.40	7.11	470	465	50	13.9	25	

Part Number	Emission Color	LED Material	I_F (mA)	V_F (V)		CCT			Flux (lm)		View Angle 2θ ½
				Typ.	Max.	Min.	Typ.	Max.	Min.	Typ.	
HT-P168BPH	White	InGaN	150	3.40	3.99	3000	-	9000	10.7	20	±55
HT-P168BPU	White	InGaN	350	3.40	3.99	3000	-	9000	18.1	30	
HT-P268BPV	White	InGaN	700	3.40	3.99	3000	-	9000	40.0	70	
HT-P368BPW	White	InGaN	1050	3.40	3.99	3000	-	9000	67.2	100	
HT-D468BPV	White	InGaN	700	6.40	7.11	3000	-	9000	113.6	150	

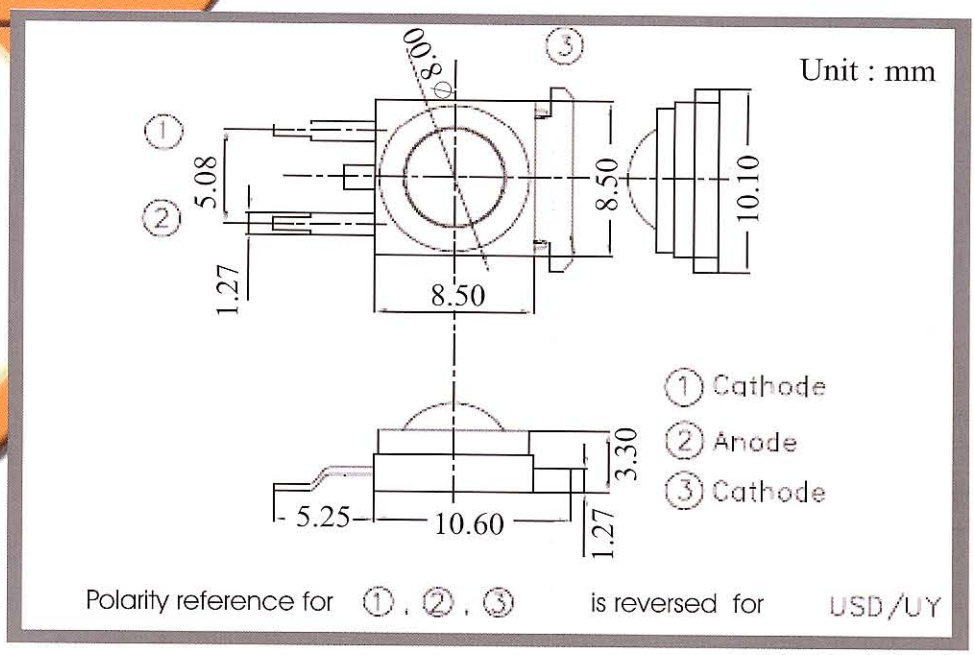

Part Number	Emission Color	LED Material	I_F (mA)	V_F (V)		λ (nm)			Flux (lm)		View Angle 2θ ½
				Typ.	Max.	λd	λp	Δλ	Min.	Typ.	
HT-P176USDJ	Red	AlInGaP	100	2.20	2.79	625	636	30	2.9	5	±35
HT-P176UYJ	Amber	AlInGaP	100	2.20	2.79	595	600	30	2.9	5	
HT-P176NGH	Green	InGaN	150	3.40	3.99	527	522	50	2.9	5	
HT-P176NBH	Blue	InGaN	150	3.40	3.99	470	465	50	2.0	2.5	
HT-P176USDT	Red	AlInGaP	300	2.20	2.79	625	636	30	13.9	18	
HT-P176UYT	Amber	AlInGaP	300	2.20	2.79	595	600	30	13.9	18	
HT-P176NGU	Green	InGaN	350	3.40	3.99	527	522	50	18.1	25	
HT-P176NBU	Blue	InGaN	350	3.40	3.99	470	465	50	2·9	8	
HT-P276USDS	Red	AlInGaP	600	2.20	2.79	625	636	30	18.1	35	
HT-P276UYS	Amber	AlInGaP	600	2.20	2.79	595	600	30	18.1	30	
HT-P276NGV	Green	InGaN	700	3.40	3.99	527	522	50	30.6	50	
HT-P276NBV	Blue	InGaN	700	3.40	3.99	470	465	50	4.9	12	
HT-P376USDY	Red	AlInGaP	900	2.20	2.79	625	636	30	23.5	50	
HT-P376UYY	Amber	AlInGaP	900	2.20	2.79	595	600	30	23.5	45	
HT-P376NGW	Green	InGaN	1050	3.40	3.99	527	522	50	39.8	70	
HT-P376NBW	Blue	InGaN	1050	3.40	3.99	470	465	50	4.9	17	
HT-D476NGV	Green	InGaN	700	6.40	7.11	527	522	50	67.2	100	
HT-D476NBV	Blue	InGaN	700	6.40	7.11	470	465	50	13.9	25	

Part Number	Emission Color	LED Material	I_F (mA)	V_F (V)		CCT			Flux (lm)		View Angle 2θ ½
				Typ.	Max.	Min.	Typ.	Max.	Min.	Typ.	
HT-P176BPH	White	InGaN	150	3.40	3.99	3000	-	9000	10.7	20	±35
HT-P176BPU	White	InGaN	350	3.40	3.99	3000	-	9000	18.1	30	
HT-P276BPV	White	InGaN	700	3.40	3.99	3000	-	9000	40.0	70	
HT-P376BPW	White	InGaN	1050	3.40	3.99	3000	-	9000	67.2	100	
HT-D476BPV	White	InGaN	700	6.40	7.11	3000	-	9000	113.6	150	

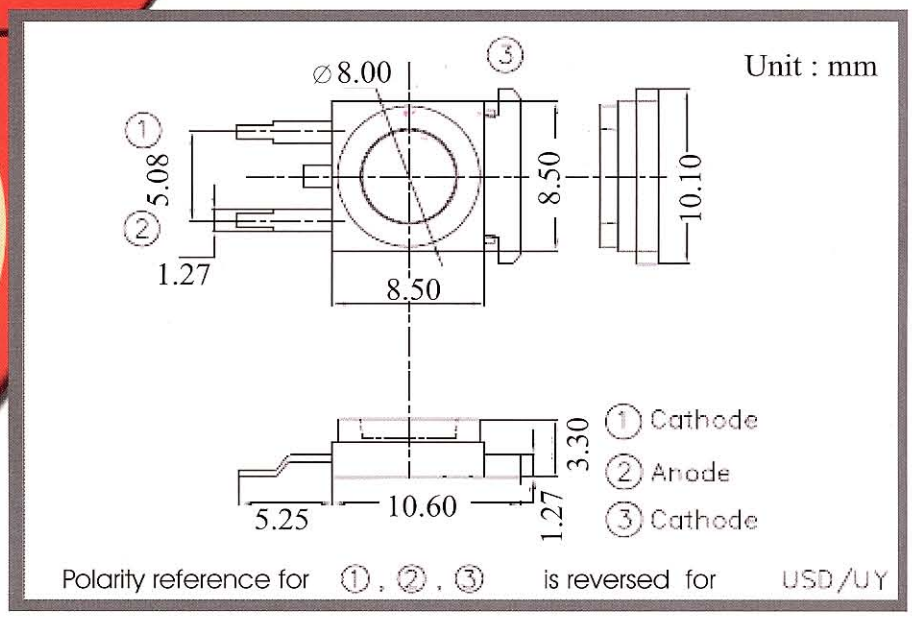

Part Number	Emission Color	LED Material	I_F (mA)	V_F (V)		λ (nm)			Flux (lm)		View Angle 2θ ½
				Typ.	Max.	λd	λp	Δλ	Min.	Typ.	
HT-P178USDJ	Red	AlInGaP	100	2.20	2.79	625	636	30	2.9	5	±55
HT-P178UYJ	Amber	AlInGaP	100	2.20	2.79	595	600	30	2.9	5	
HT-P178NGH	Green	InGaN	150	3.40	3.99	527	522	50	2.9	5	
HT-P178NBH	Blue	InGaN	150	3.40	3.99	470	465	50	2.0	2.6	
HT-P178USDT	Red	AlInGaP	300	2.20	2.79	625	636	30	13.9	18	
HT-P178UYT	Amber	AlInGaP	300	2.20	2.79	595	600	30	13.9	18	
HT-P178NGU	Green	InGaN	350	3.40	3.99	527	522	50	18.1	25	
HT-P178NBU	Blue	InGaN	350	3.40	3.99	470	465	50	2.9	8	
HT-P278USDS	Red	AlInGaP	600	2.20	2.79	625	636	30	18.1	35	
HT-P278UYS	Amber	AlInGaP	600	2.20	2.79	595	600	30	18.1	30	
HT-P278NGV	Green	InGaN	700	3.40	3.99	527	522	50	30.6	50	
HT-P278NBV	Blue	InGaN	700	3.40	3.99	470	465	50	4.9	12	
HT-P378USDY	Red	AlInGaP	900	2.20	2.79	625	636	30	23.5	50	
HT-P378UYY	Amber	AlInGaP	900	2.20	2.79	595	600	30	23.5	45	
HT-P378NGW	Green	InGaN	1050	3.40	3.99	527	522	50	39.8	70	
HT-P378NBW	Blue	InGaN	1050	3.40	3.99	470	465	50	4.9	17	
HT-D478NGV	Green	InGaN	700	6.40	7.11	527	522	50	67.2	100	
HT-D478NBV	Blue	InGaN	700	6.40	7.11	470	465	50	13.9	25	

Part Number	Emission Color	LED Material	I_F (mA)	V_F (V)		CCT			Flux (lm)		View Angle 2θ ½
				Typ.	Max.	Min.	Typ.	Max.	Min.	Typ.	
HT-P178BPH	White	InGaN	150	3.40	3.99	3000	-	9000	10.7	20	±55
HT-P178BPU	White	InGaN	350	3.40	3.99	3000	-	9000	18.1	30	
HT-P278BPV	White	InGaN	700	3.40	3.99	3000	-	9000	40.0	70	
HT-P378BPW	White	InGaN	1050	3.40	3.99	3000	-	9000	80.0	100	
HT-D478BPV	White	InGaN	700	6.40	7.11	3000	-	9000	113.6	150	

HT-MBP Series

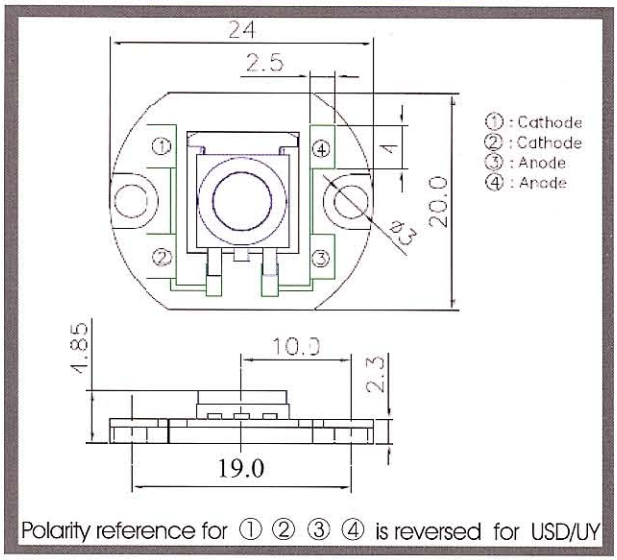

HT-Lens-6

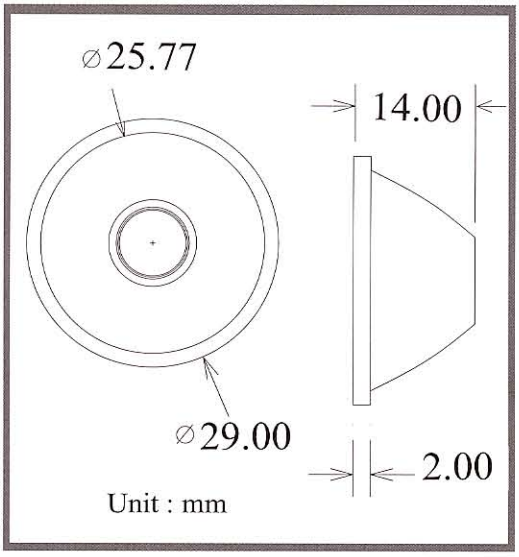

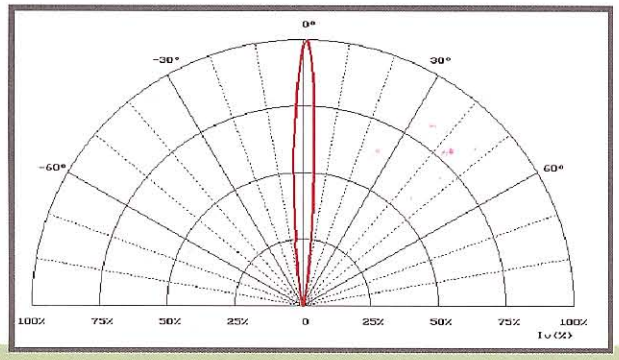

HT-Lens-15

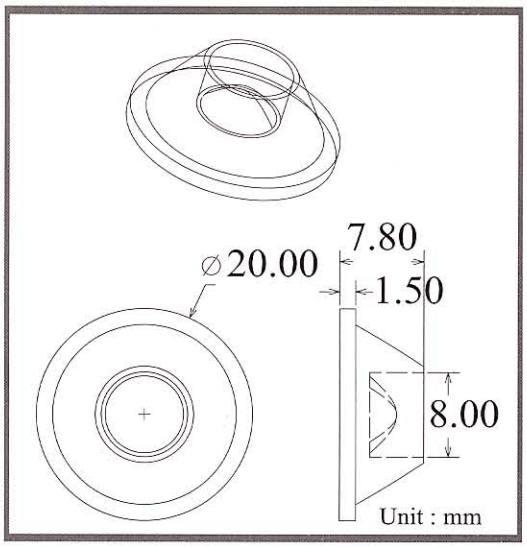

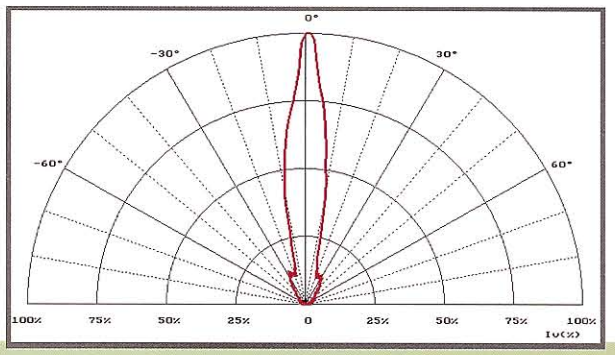

HT-LB1131

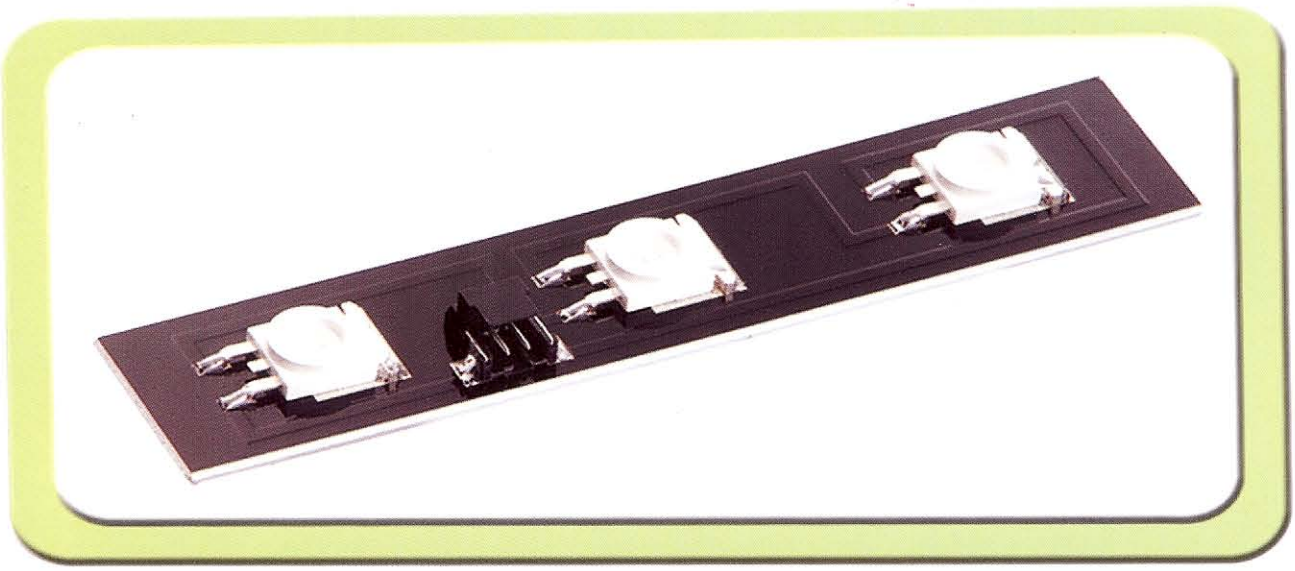

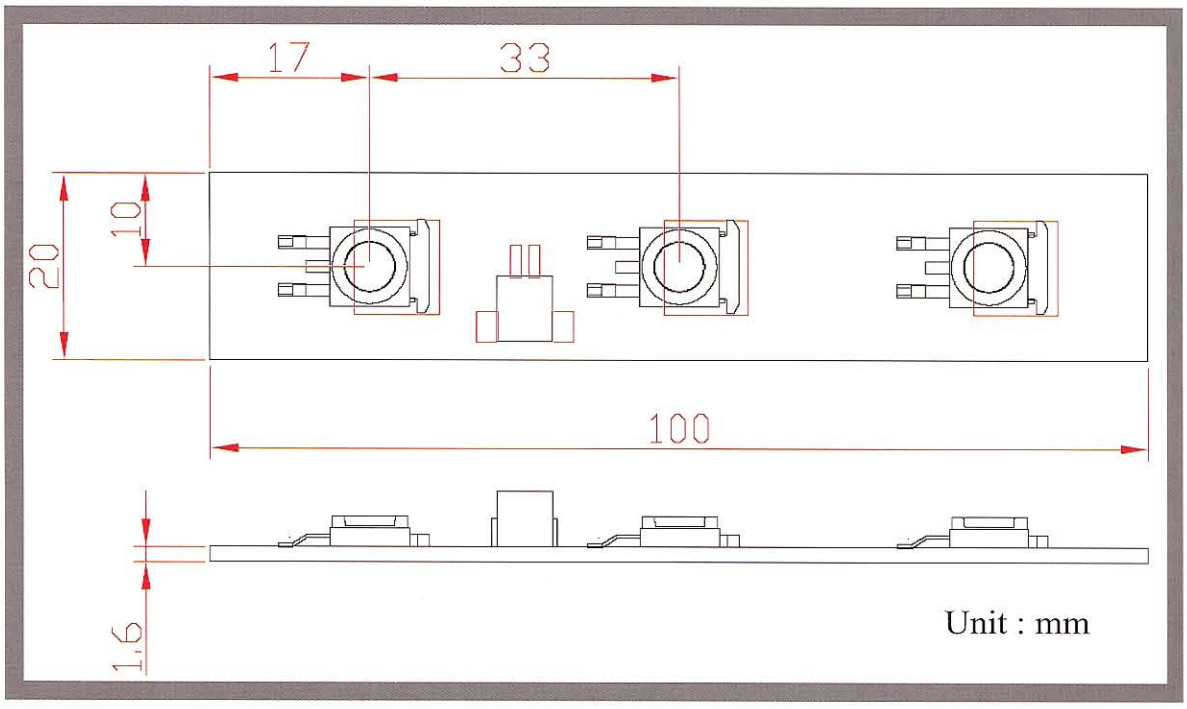

Part Number	Emission Color	LED Material	I_F(mA)	V_F(V)		Flux (lm)	
				Typ.	Max.	Min.	Typ.
HT-LB1131USDT	Red	AlInGaP	300	6.6	8.4	40	54
HT-LB1131UYT	Amber	AlInGaP	300	6.6	8.4	40	54
HT-LB1131NGU	Green	InGaN	350	12.0	12.0	50	75
HT-LB1131NBU	Blue	InGaN	350	12.0	12.0	8	24
HT-LB1131BPU	White	InGaN	350	12.0	12.0	50	90

Light Bars

HT-LB2141

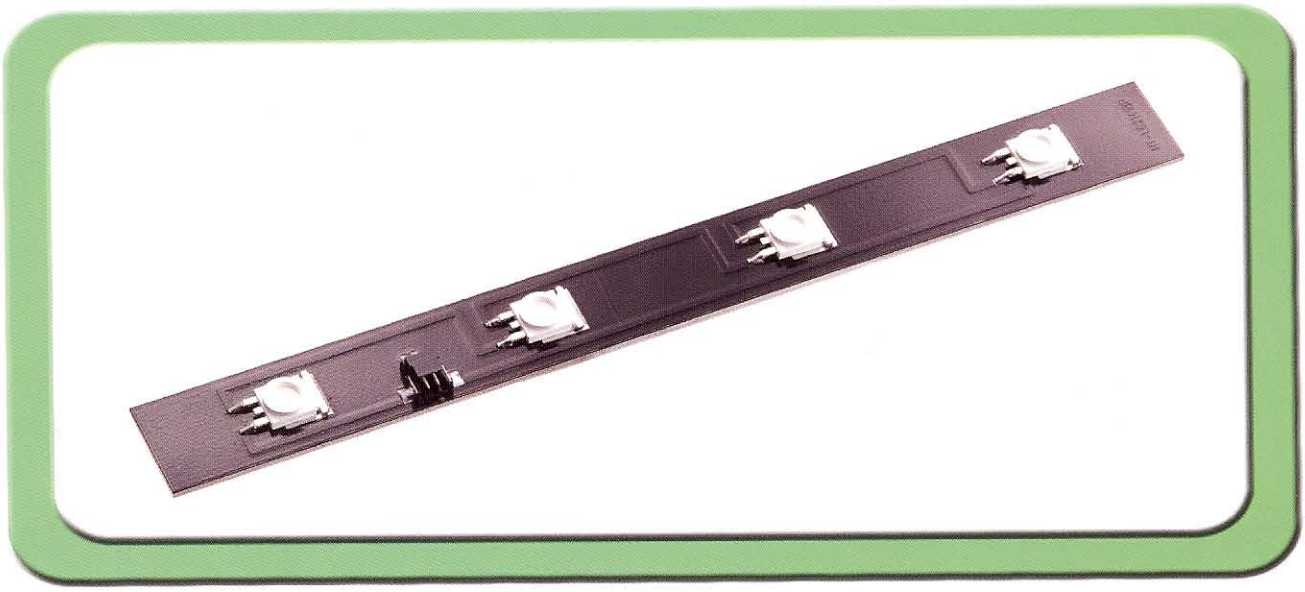

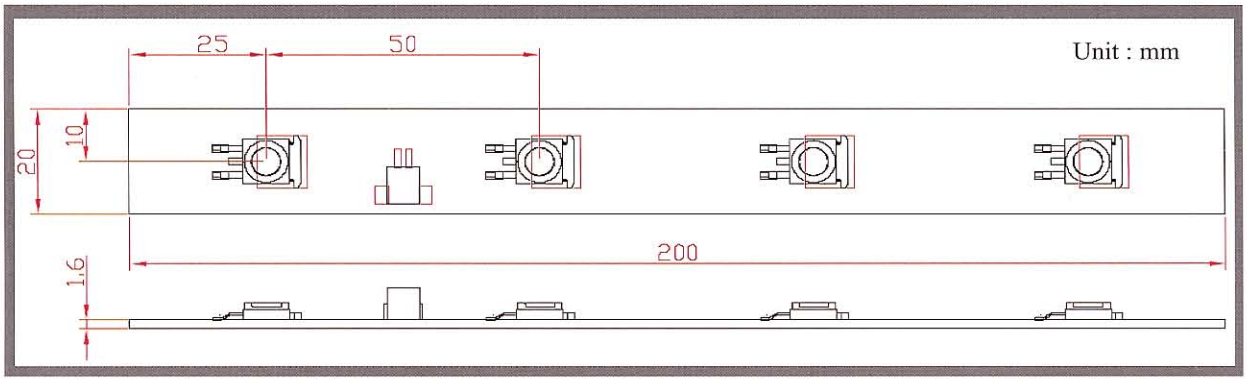

Part Number	Emission Color	LED Material	I_F(mA)	V_F(V)		Flux (lm)	
				Typ.	Max.	Min.	Typ.
HT-LB2141USDT	Red	AlInGaP	300	8.8	11.2	50	72
HT-LB2141UYT	Amber	AlInGaP	300	8.8	11.2	50	72
HT-LB2141NGU	Green	InGaN	350	13.6	16.0	70	100
HT-LB2141NBU	Blue	InGaN	350	13.6	16.0	10	32
HT-LB2141BPU	White	InGaN	350	13.6	16.0	70	120

Light Bars

HT-LB3233

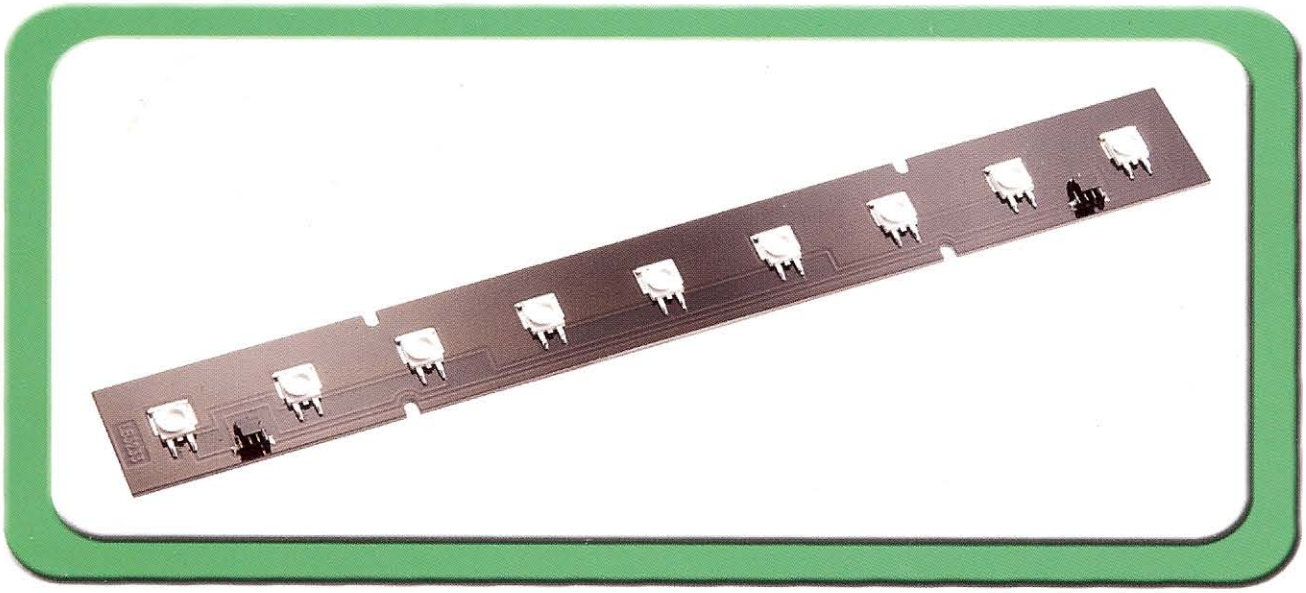

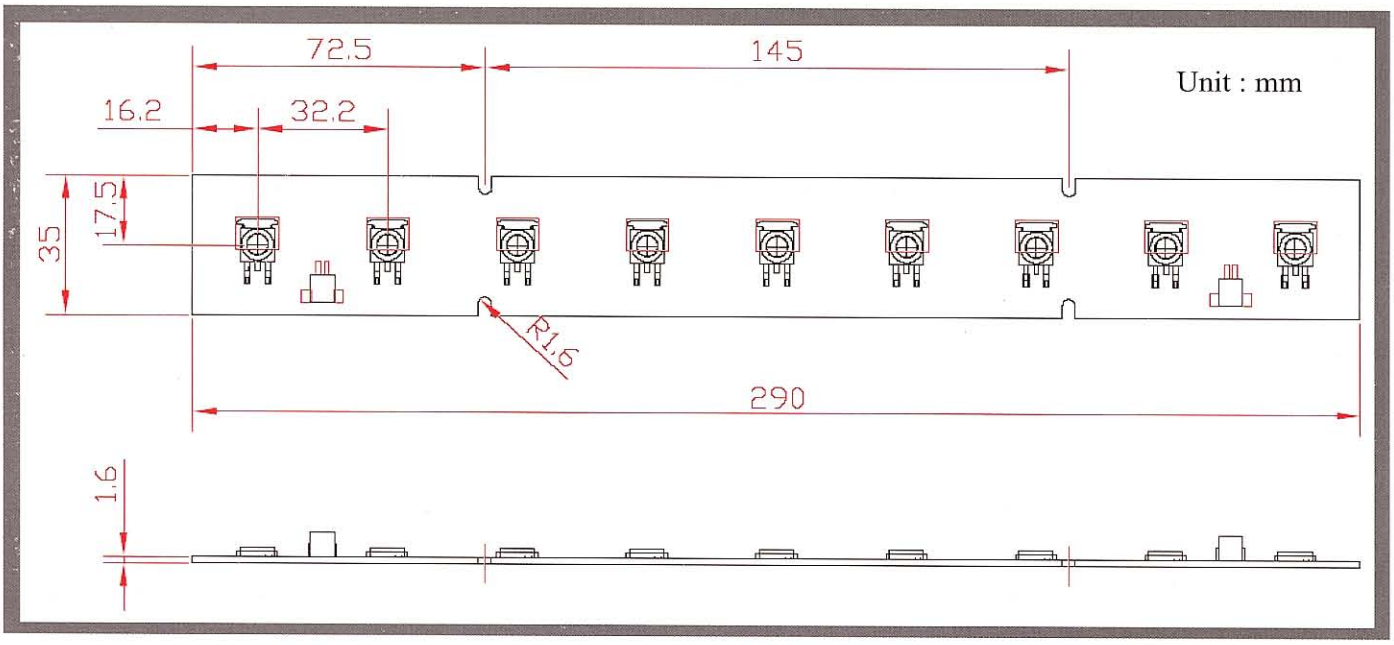

Part Number	Emission Color	LED Material	I_F (mA)	V_F (V)		Flux (lm)	
				Typ.	Max.	Min.	Typ.
HT-LB3233USDY	Red	AlInGaP	900	6.6	8.4	120	162
HT-LB3233UYY	Amber	AlInGaP	900	6.6	8.4	120	162
HT-LB3233NGW	Green	InGaN	1050	10.2	12.0	160	225
HT-LB3233NBW	Blue	InGaN	1050	10.2	12.0	20	72
HT-LB3233BPW	White	InGaN	1050	10.2	12.0	160	270

Light Bars

HT-LB3262

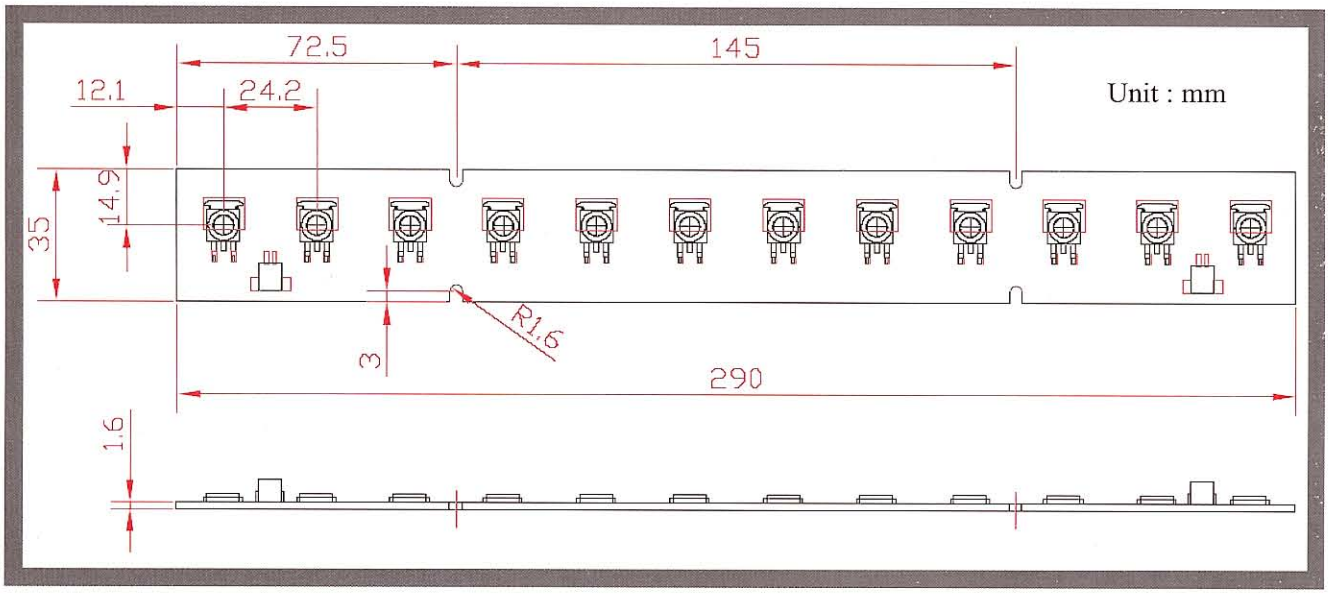

Part Number	Emission Color	LED Material	I_F (mA)	V_F (V)		Flux (lm)	
				Typ.	Max.	Min.	Typ.
HT-LB3262USDS	Red	AlInGaP	600	13.2	16.8	160	216
HT-LB3262UYS	Amber	AlInGaP	600	13.2	16.8	160	216
HT-LB3262NGV	Green	InGaN	700	20.4	24.0	210	300
HT-LB3262NBV	Blue	InGaN	700	20.4	24.0	30	96
HT-LB3262BPV	White	InGaN	700	20.4	24.0	210	360

HT-LB3432

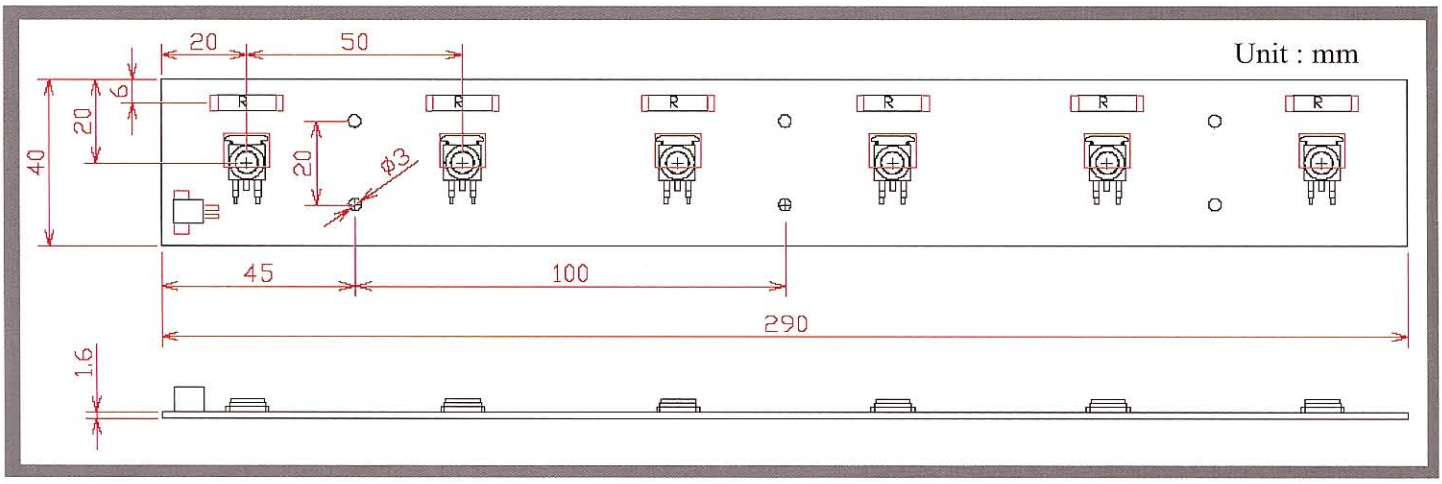

Part Number	Emission Color	LED Material	I_F (mA)	V_F (V)		Flux (lm)	
				Typ.	Max.	Min.	Typ.
HT-LB3432USDS	Red	AlInGaP	600	6.6	8.4	80	108
HT-LB3432UYS	Amber	AlInGaP	600	6.6	8.4	80	108
HT-LB3432NGV	Green	InGaN	700	10.2	12.0	100	150
HT-LB3432NBV	Blue	InGaN	700	10.2	12.0	15	48
HT-LB3432BPV	White	InGaN	700	10.2	12.0	100	180

Light Bars

HT-LB4431

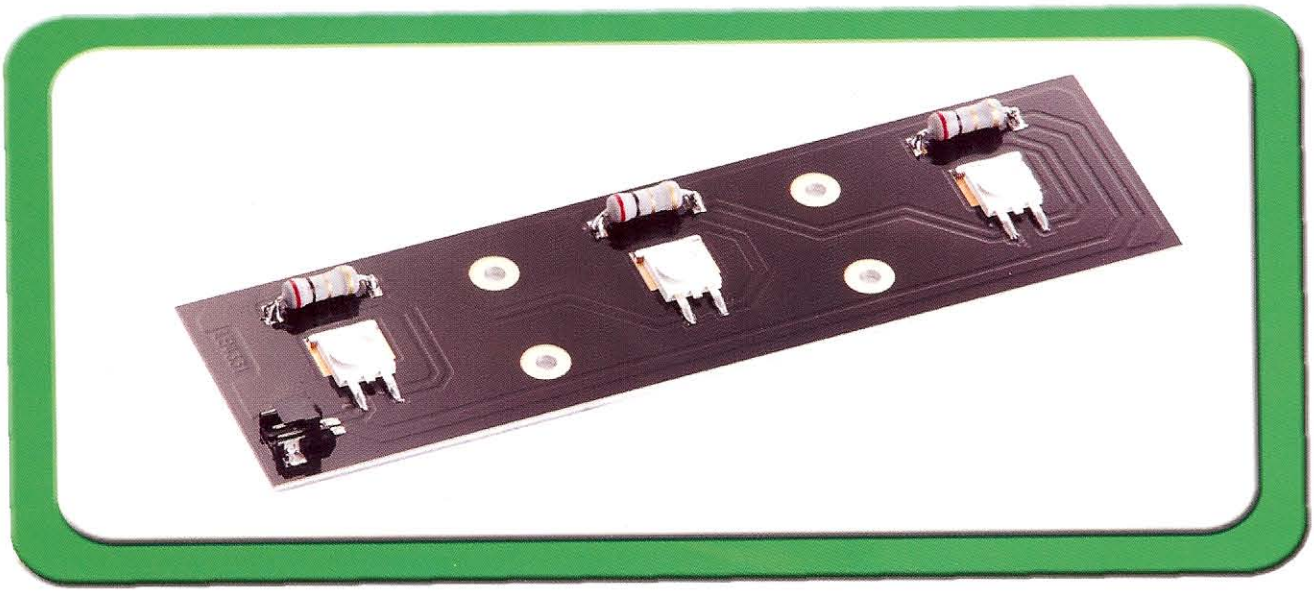

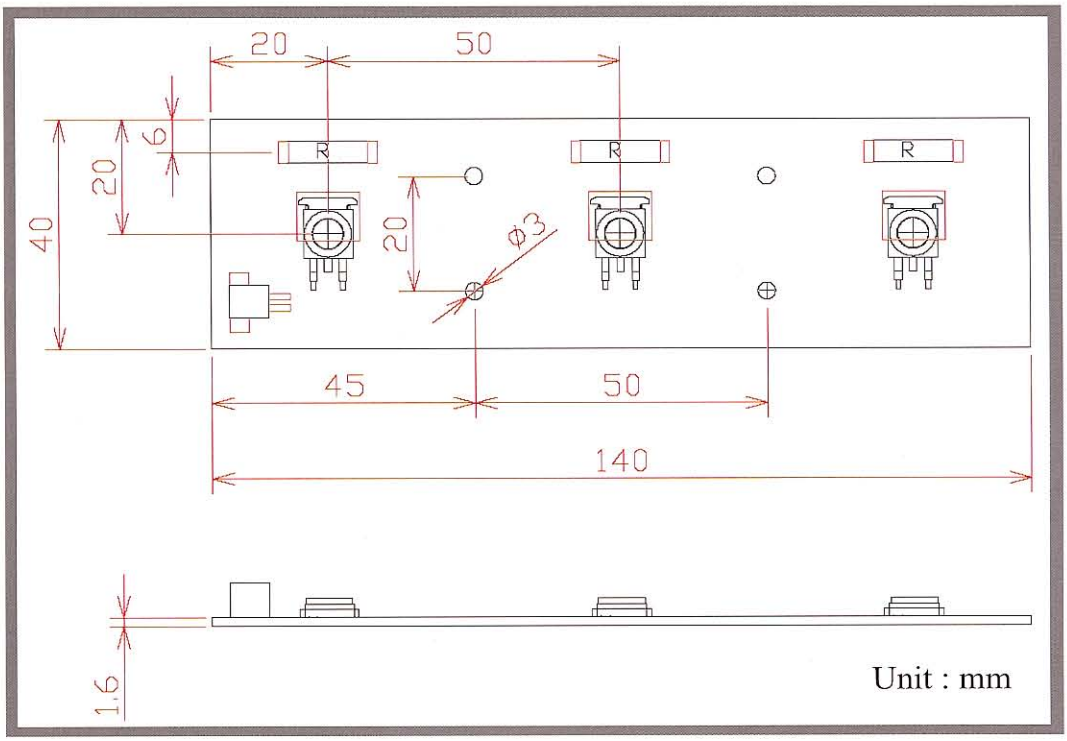

Part Number	Emission Color	LED Material	I_F (mA)	V_F (V)		Flux (lm)	
				Typ.	Max.	Min.	Typ.
HT-LB4431USDT	Red	AlInGaP	300	6.6	8.4	40	54
HT-LB4431UYT	Amber	AlInGaP	300	6.6	8.4	40	54
HT-LB4431NGU	Green	InGaN	350	10.2	12.0	50	75
HT-LB4431NBU	Blue	InGaN	350	10.2	12.0	8	24
HT-LB4431BPU	White	InGaN	350	10.2	12.0	50	90

Light Bars

HT-LB2331

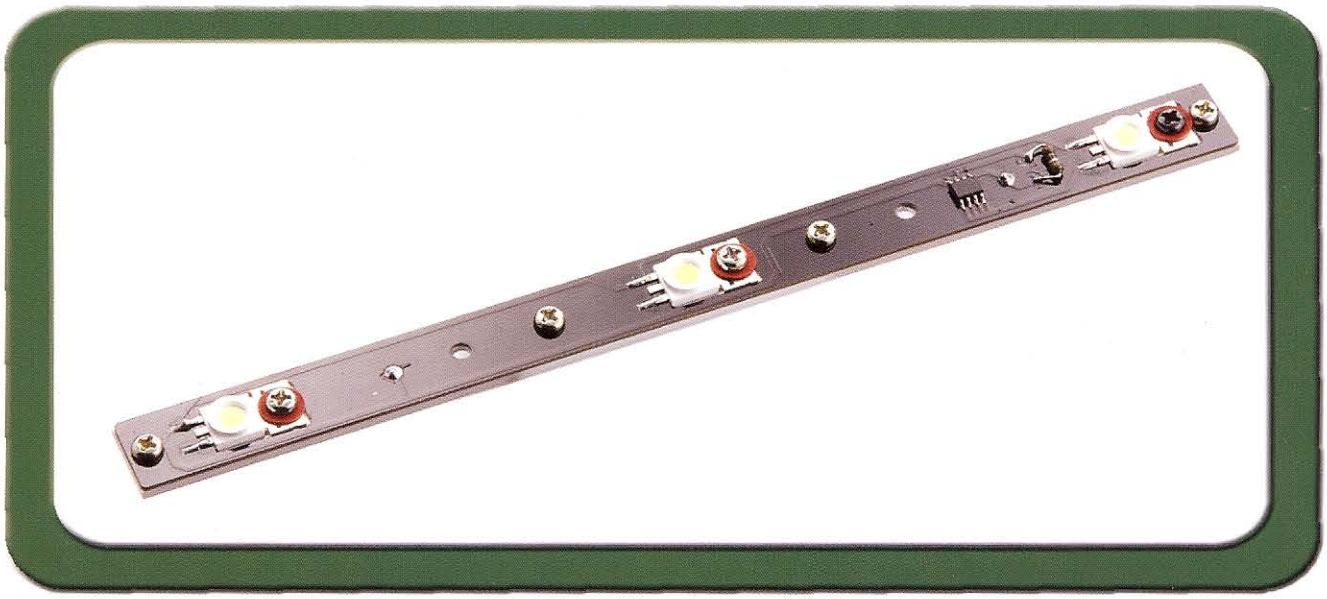

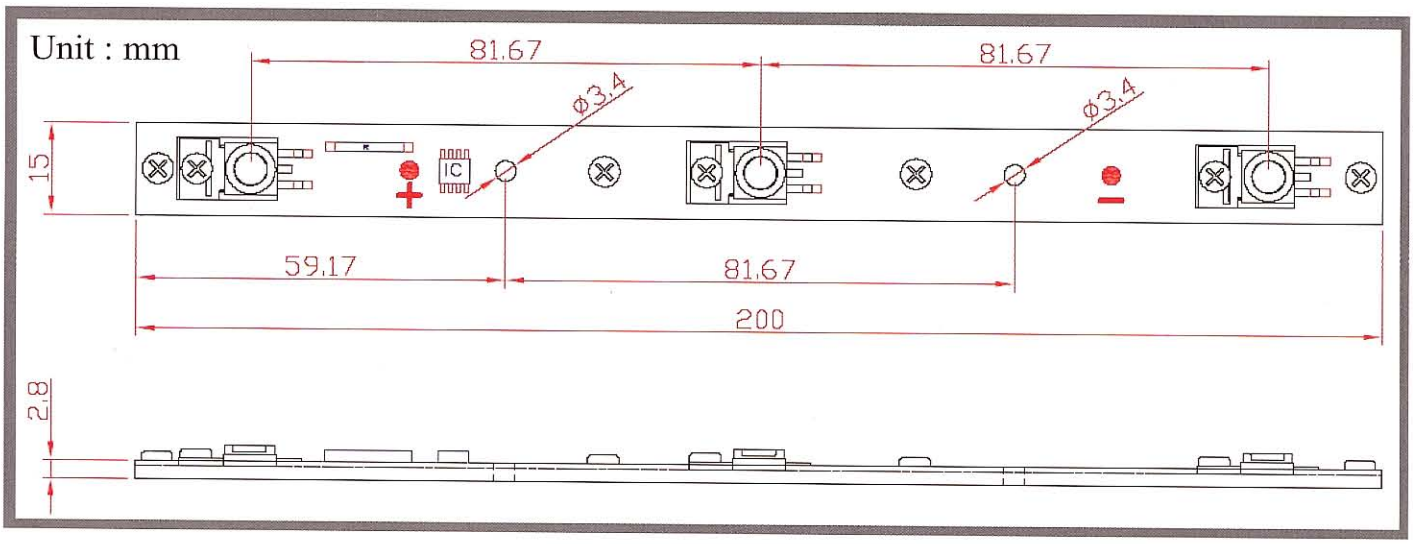

Part Number	Emission Color	LED Material	Input Voltage (V)
HT-LB2331USD	Red	AlInGaP	12
HT-LB2331UY	Amber	AlInGaP	12
HT-LB2331NG	Green	InGaN	12
HT-LB2331NB	Blue	InGaN	12
HT-LB2331BP	White	InGaN	12

Round 12_RGB

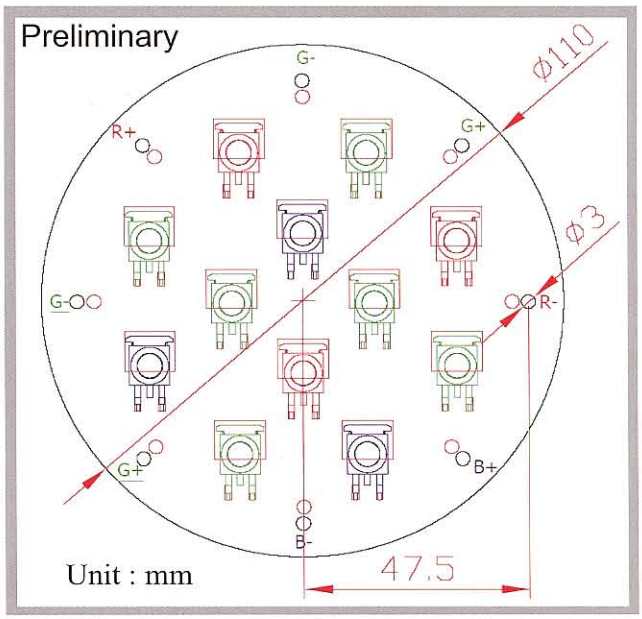

Round_7

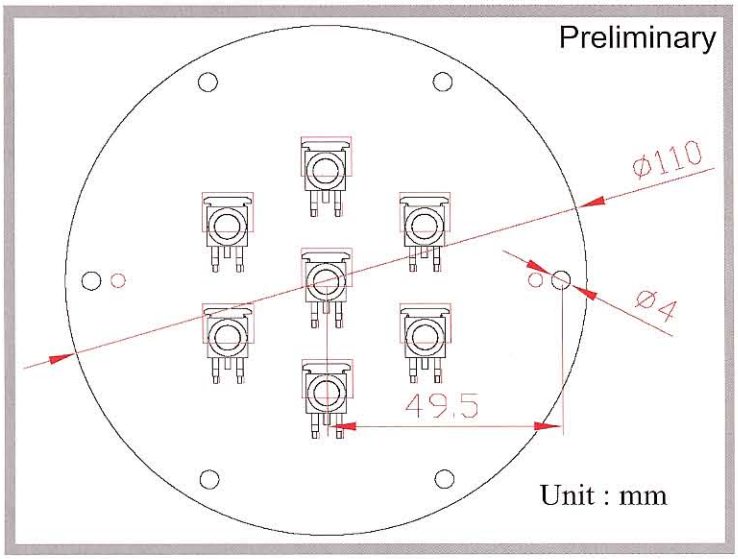

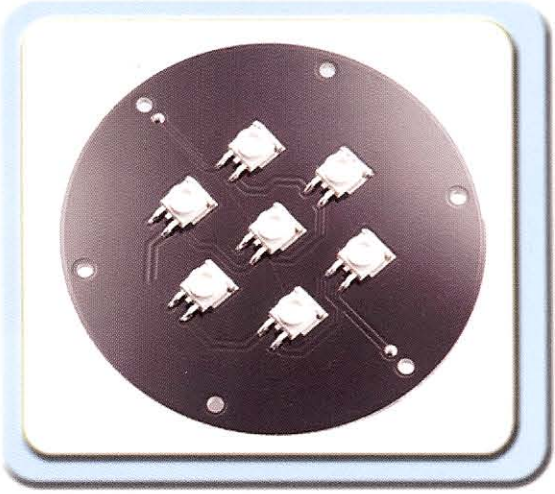

Ring_1

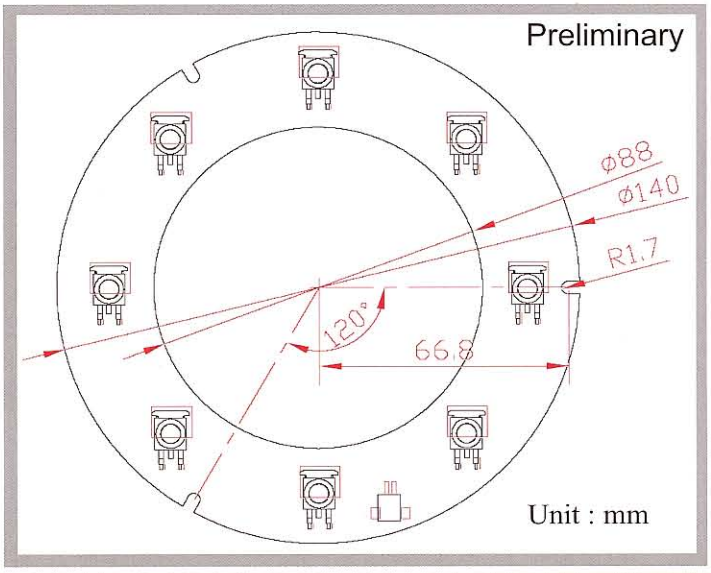

HT-MR16

Type A

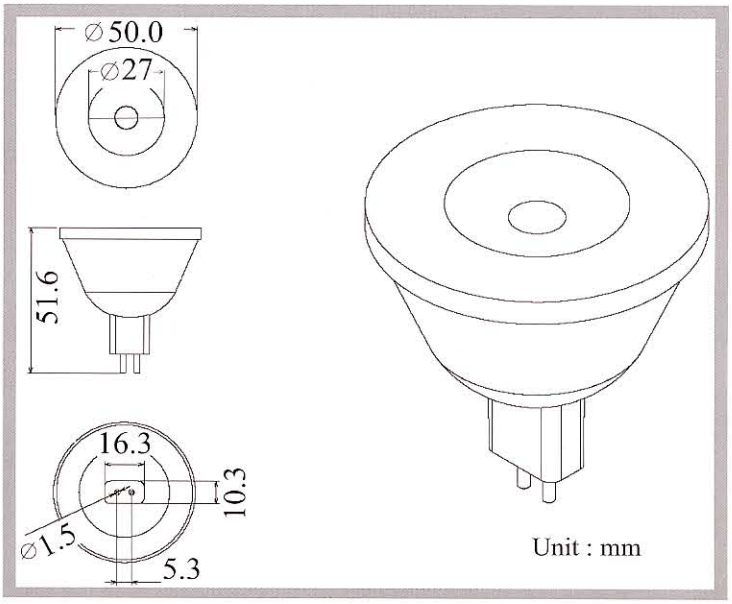

Part Number	Emission Color	LED Material	Input (AC/DC)		λ(nm)			Flux	View Angle 2θ ½
			Min	Max.	λd	λp	Δλ		
HT-MR16USDU-A1	Red	AlInGaP	10.0	14.0	625	636	30	15.0	±5
HT-MR16UYU-A1	Amber	AlInGaP	10.0	14.0	595	600	30	15.0	
HT-MR16NGU-A1	Green	InGaN	10.0	14.0	527	522	50	20.0	
HT-MR16NBU-A1	Blue	InGaN	10.0	14.0	470	465	50	5.0	

Part Number	Emission Color	LED Material	Input (AC/DC)		CCT			Flux	View Angle 2θ ½
			Min	Max.	Min		Max		
HT-MR16BPU-A1	White	InGaN	10.0	14.0	3000	-	9000	20.0	±5
HT-MR16VPU-A1	Pink	InGaN	10.0	14.0	-	-	-	4.0	

HT-MR16

Type B

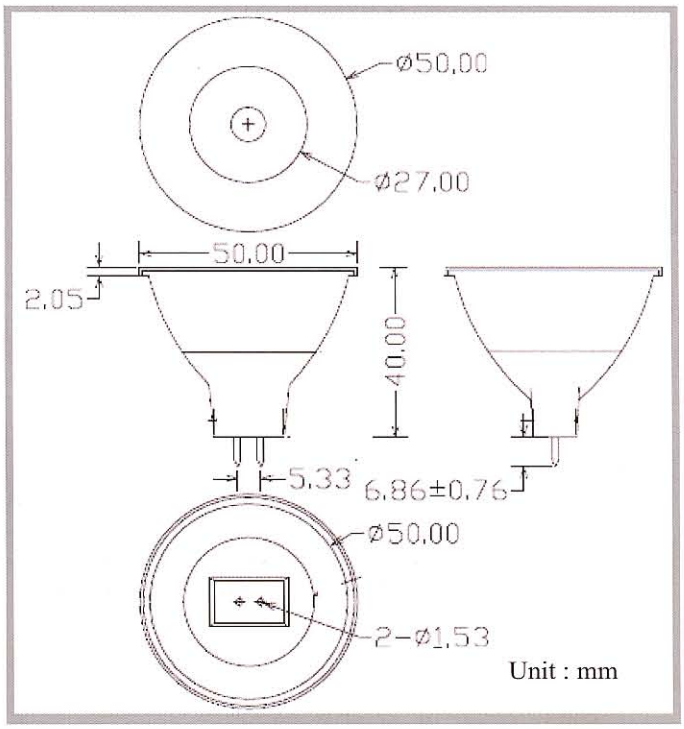

Part Number	Emission Color	LED Material	Input (AC/DC)		λ(nm)			Flux	View Angle 2θ ½
			Min	Max.	λd	λp	Δλ		
HT-MR16USDU-B1	Red	AlInGaP	10.0	14.0	625	636	30	15.0	±5
HT-MR16UYU-B1	Amber	AlInGaP	10.0	14.0	595	600	30	15.0	
HT-MR16NGU-B1	Green	InGaN	10.0	14.0	527	522	50	20.0	
HT-MR16NBU-B1	Blue	InGaN	10.0	14.0	470	465	50	5.0	

Part Number	Emission Color	LED Material	Input (AC/DC)		CCT			Flux	View Angle 2θ ½
			Min	Max.	Min		Max		
HT-MR16BPU-B1	White	InGaN	10.0	14.0	3000	-	9000	20.0	±5
HT-MR16VPU-B1	Pink	InGaN	10.0	14.0	-	-	-	4.0	

HT-MR16

Type C

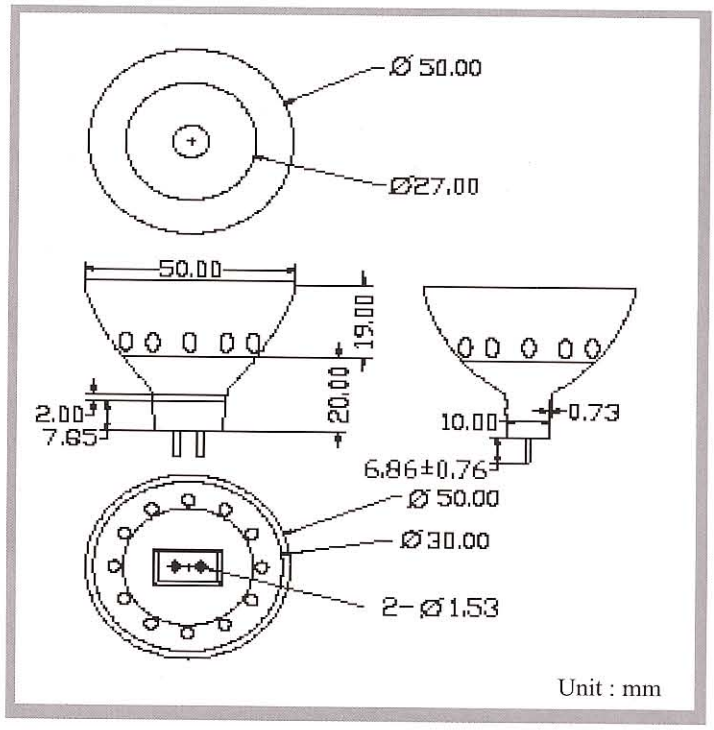

Part Number	Emission Color	LED Material	Input (AC/DC)		λ(nm)			Flux	View Angle 2θ ½
			Min	Max.	λd	λp	Δλ		
HT-MR16USDU-C2	Red	AlInGaP	10.0	14.0	625	636	30	15.0	±5
HT-MR16UYU-C2	Amber	AlInGaP	10.0	14.0	595	600	30	15.0	
HT-MR16NGU-C2	Green	InGaN	10.0	14.0	527	522	50	20.0	
HT-MR16NBU-C2	Blue	InGaN	10.0	14.0	470	465	50	5.0	

Part Number	Emission Color	LED Material	Input (AC/DC)		CCT			Flux	View Angle 2θ ½
			Min	Max.	Min		Max		
HT-MR16BPU-C2	White	InGaN	10.0	14.0	3000	-	9000	20.0	±5
HT-MR16VPU-C2	Pink	InGaN	10.0	14.0	-	-	-	4.0	

LED Spot Lights

LE-XXXXXFV1

1:DC Power Input
2:DMX/IIC Signal Input Terminal
3:DC Power Input
4:DMX/IIC Signal Output Terminal
5:Base

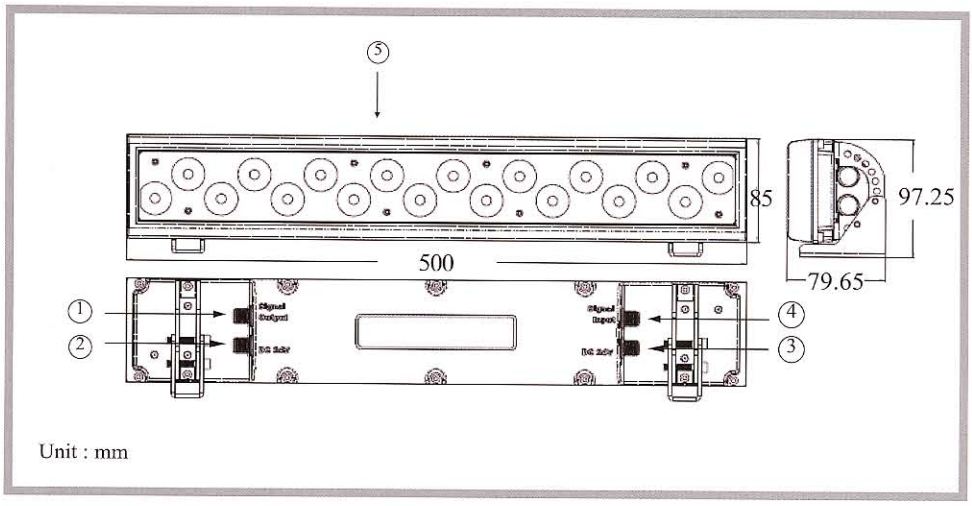

Product Series		DMX	IIC
	15°	LE-DMX15FV1	LE-IIC15FV1
	30°	LE-DMX30FV1	LE-IIC30FV1
Water Resistant Level		IP 68 (excluding power supply)	
Appearance Color		Gold	
Input Voltage		AC 110 ~ 240V	
Power Consumption		28.8W	
Working Temperature		-40°C~85°C (excluding power supply)	
Weight		3Kg	
Safety Standard		CE	

The LED Spot light consistes of 18 units of 1W HarvaLEDs. It is IP68 rated can be placed 2.5 meters under water for a duration of 48 hours.

LED Spot Lights

LC-XXXXXFV1

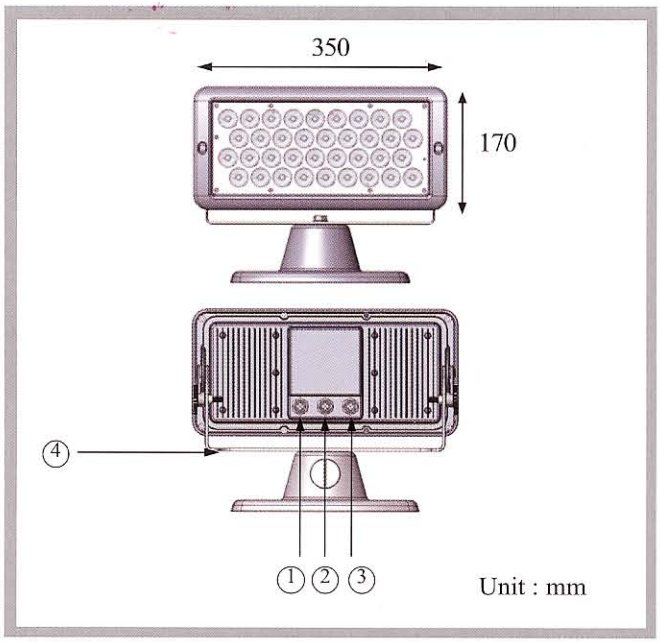

1:DC Power input
2:DMX/IIC Signal Input Terminal
3:DMX/IIC Signal output Terminal
4:Base

Product Series		DMX	IIC
	15°	LC-DMX15FV1	LC-IIC15FV1
	30°	LC-DMX30FV1	LC-IIC30FV1
Water Resistant Level	IP 68 (excluding power supply)		
Appearance Color	Gold		
Input Voltage	AC 110 ~ 240V		
Power Consumption	55W		
Working Temprature	-40°C~85°C (excluding power supply)		
Weight	6.5Kg		
Safety Standard	CE		

The LED Spot light consistes of 36 units of 1W HarvaLEDs. It is IP68 rated can be placed 2.5 meters under water for a duration of 48 hours.

LED Spot Lights

Mercury Series

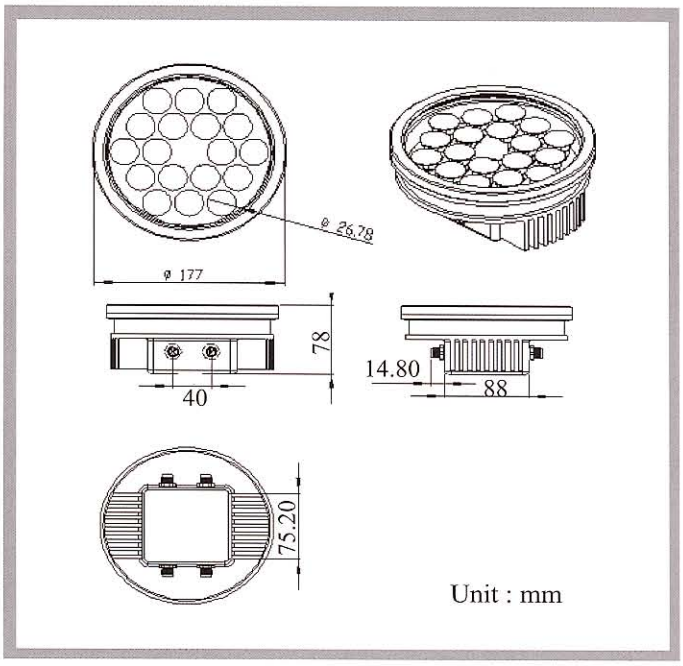

Water Resistant Level	IP68 (exclude power supply)
Input Voltage	AC 110 ~ 240V
Power Consumption	28.8W
Operating temp	-40°C~85°C (excluding power supply)

The LED Spot light consistes of 18 units of 1W HarvaLEDs. It is IP68 rated can be placed 2.5 meters under water for a duration of 48 hours.